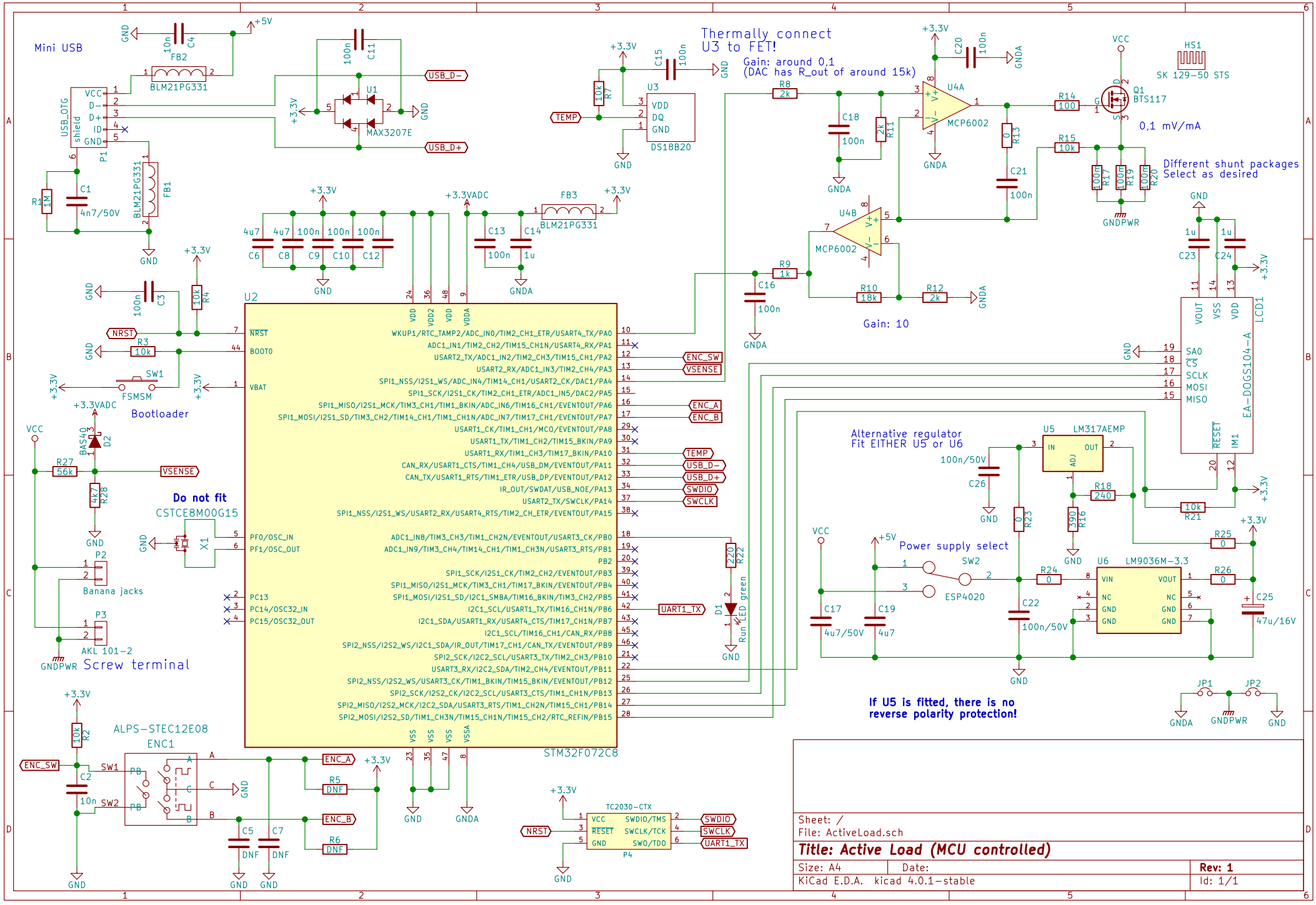
Mini USB
USB_OTG
VCC
D-
D+
ID
GND
shield
P1
FB2
BLM21PG331
C4
10n
+5V
C11
100n
U1
MAX3207E
USB_D-
USB_D+
R1
1M
C1
4n7/50V
FB1
BLM21PG331
+3.3V
GND
U2
STM32F072C8
NRST
BOOT0
VBAT
VDD
VDD2
VDDA
VSS
VSSA
WKUP1/RTC_TAMP2/ADC_IN0/TIM2_CH1_ETR/USART4_TX/PA0
ADC1_IN1/TIM2_CH2/TIM15_CH1N/USART4_RX/PA1
USART2_TX/ADC1_IN2/TIM2_CH3/TIM15_CH1/PA2
USART2_RX/ADC1_IN3/TIM2_CH4/PA3
SPI1_NSS/I2S1_WS/ADC_IN4/TIM14_CH1/USART2_CK/DAC1/PA4
SPI1_SCK/I2S1_CK/TIM2_CH1_ETR/ADC1_IN5/DAC2/PA5
SPI1_MISO/I2S1_MCK/TIM3_CH1/TIM1_BKIN/ADC_IN6/TIM16_CH1/EVENTOUT/PA6
SPI1_MOSI/I2S1_SD/TIM3_CH2/TIM14_CH1/TIM1_CH1N/ADC_IN7/TIM17_CH1/EVENTOUT/PA7
USART1_CK/TIM1_CH1/MCO/EVENTOUT/PA8
USART1_TX/TIM1_CH2/TIM15_BKIN/PA9
USART1_RX/TIM1_CH3/TIM17_BKIN/PA10
CAN_RX/USART1_CTS/TIM1_CH4/USB_DM/EVENTOUT/PA11
CAN_TX/USART1_RTS/TIM1_ETR/USB_DP/EVENTOUT/PA12
IR_OUT/SWDAT/USB_NOE/PA13
USART2_TX/SWCLK/PA14
SPI1_NSS/I2S1_WS/USART2_RX/USART4_RTS/TIM2_CH_ETR/EVENTOUT/PA15
PF0/OSC_IN
PF1/OSC_OUT
ADC1_IN8/TIM3_CH3/TIM1_CH2N/EVENTOUT/USART3_CK/PB0
ADC1_IN9/TIM3_CH4/TIM14_CH1/TIM1_CH3N/USART3_RTS/PB1
PB2
SPI1_SCK/I2S1_CK/TIM2_CH2/EVENTOUT/PB3
SPI1_MISO/I2S1_MCK/TIM3_CH1/TIM17_BKIN/EVENTOUT/PB4
SPI1_MOSI/I2S1_SD/I2C1_SMBA/TIM16_BKIN/TIM3_CH2/PB5
I2C1_SCL/USART1_TX/TIM16_CH1N/PB6
I2C1_SDA/USART1_RX/USART4_CTS/TIM17_CH1N/PB7
I2C1_SCL/TIM16_CH1/CAN_RX/PB8
SPI2_NSS/I2S2_WS/I2C1_SDA/IR_OUT/TIM17_CH1/CAN_TX/EVENTOUT/PB9
SPI2_SCK/I2C2_SCL/USART3_TX/TIM2_CH3/PB10
USART3_RX/I2C2_SDA/TIM2_CH4/EVENTOUT/PB11
SPI2_NSS/I2S2_WS/USART3_CK/TIM1_BKIN/TIM15_BKIN/EVENTOUT/PB12
SPI2_SCK/I2S2_CK/I2C2_SCL/USART3_CTS/TIM1_CH1N/PB13
SPI2_MISO/I2S2_MCK/I2C2_SDA/USART3_RTS/TIM1_CH2N/TIM15_CH1/PB14
SPI2_MOSI/I2S2_SD/TIM1_CH3N/TIM15_CH1N/TIM15_CH2/RTC_REFIN/PB15
ENC_SW
VSENSE
ENC_A
ENC_B
TEMP
SWDIO
SWCLK
UART1_TX
R3
10k
SW1
FSMSM
Bootloader
+3.3VADC
BAS40
D2
R27
56k
R28
4k7
Do not fit
CSTCE8M00G15
X1
P2
Banana jacks
P3
AKL 101-2
GNDPWR
Screw terminal
R4
10k
C3
100n
C6
4u7
C8
4u7
C9
100n
C10
100n
C12
100n
C13
100n
C14
1u
FB3
BLM21PG331
R22
220
D1
Run LED green
ALPS-STEC12E08
ENC1
R2
10k
C2
10n
C5
DNF
C7
DNF
R5
DNF
R6
DNF
GNDA
TC2030-CTX
P4
VCC
RESET
GND
SWDIO/TMS
SWCLK/TCK
SWO/TDO
Thermally connect
U3 to FET!
U3
DS18B20
VDD
DQ
GND
C15
100n
R7
10k
Gain: around 0,1
(DAC has R_out of around 15k)
R8
2k
C18
100n
R11
2k
U4A
MCP6002
C20
100n
R13
0
C21
100n
R14
100
R15
10k
Q1
BTS117
HS1
SK 129-50 STS
0,1 mV/mA
Different shunt packages
Select as desired
R17
100m
R19
100m
R20
100m
U4B
MCP6002
R9
1k
C16
100n
R10
18k
R12
2k
Gain: 10
LCD1
EA-DOGS104-A
VOUT
VSS
VDD
SA0
CS
SCLK
MOSI
MISO
RESET
IM1
C23
1u
C24
1u
Alternative regulator
Fit EITHER U5 or U6
U5
LM317AEMP
IN
OUT
ADJ
C26
100n/50V
R18
240
R16
390
R21
10k
R23
0
U6
LM9036M-3.3
VIN
VOUT
NC
GND
R24
0
R25
0
R26
0
C22
100n/50V
C25
47u/16V
Power supply select
SW2
ESP4020
C17
4u7/50V
C19
4u7
If U5 is fitted, there is no
reverse polarity protection!
JP1
JP2
Sheet: /
File: ActiveLoad.sch
Title: Active Load (MCU controlled)
Size: A4
Date:
Rev: 1
KiCad E.D.A. kicad 4.0.1-stable
Id: 1/1